| | | | | |
|---|---|---|---|---|
| SDT | rw | C:\users\fburrull\IngenieriaProtocolos\SDL\demongame\demongame.sdt | | |
| | rw | C:\users\fburrull\IngenieriaProtocolos\SDL\demongame\ | | |
| My first SDL system | | 3 | | |
| DemonGame | | 4 | rw | DemonGame.ssy |
| DemonGame | | | | |
| GameBlock | | 5 | rw | GameBlock.sbk |
| Main | | 6 | rw | Main.spr |
| Game | | 7 | rw | Game.spr |
| DemonBlock | | 8 | rw | DemonBlock.sbk |
| Demon | | 9 | rw | Demon.spr |
| Other Documents | | 10 | | |
| DemonGame | | 11 | rw | DemonGame.msc |

# Chapter My first SDL system

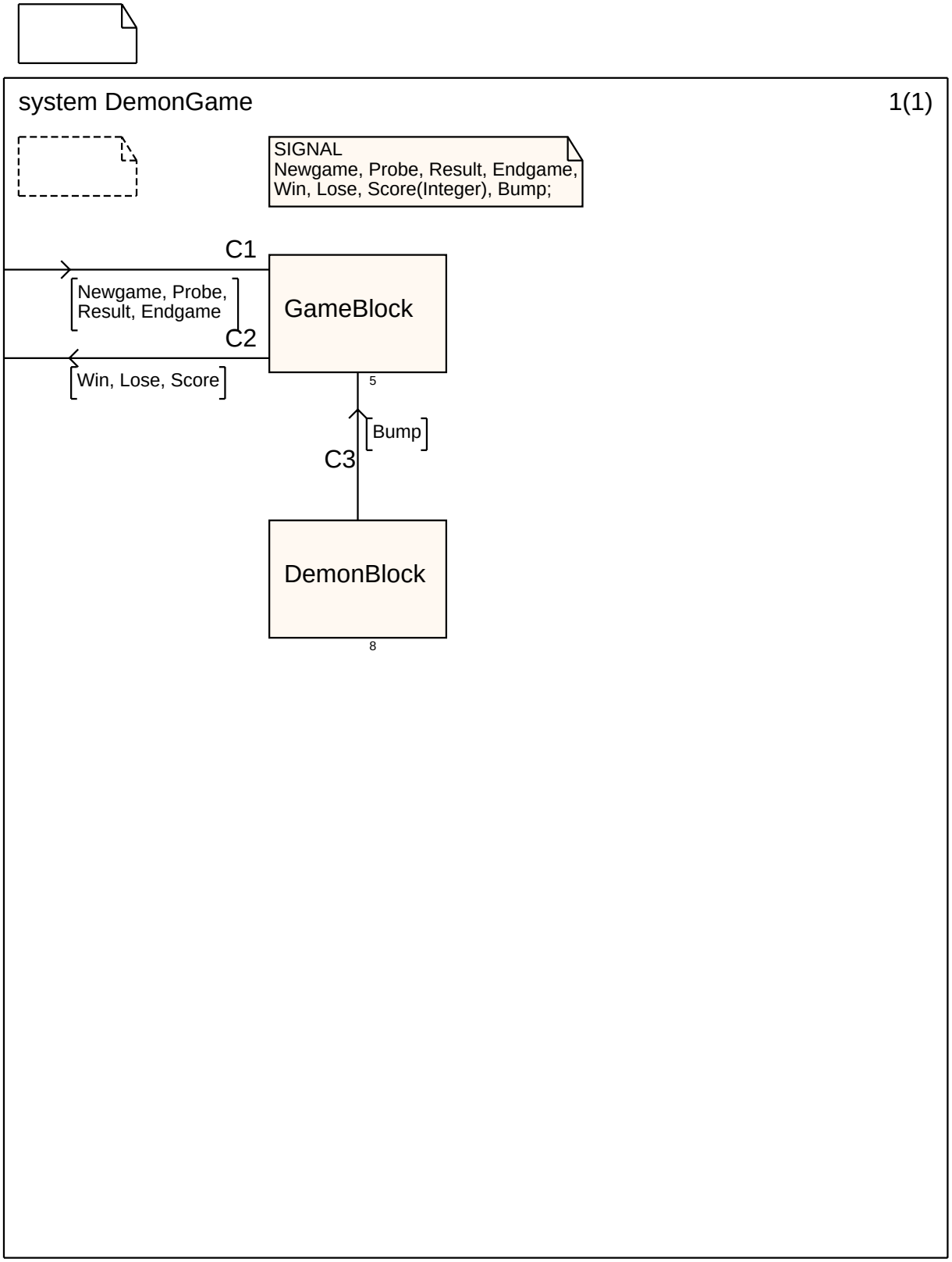
system DemonGame
1(1)
SIGNAL
Newgame, Probe, Result, Endgame,
Win, Lose, Score(Integer), Bump;
C1
Newgame, Probe,
Result, Endgame
C2
Win, Lose, Score
GameBlock
5
Bump
C3
DemonBlock
8

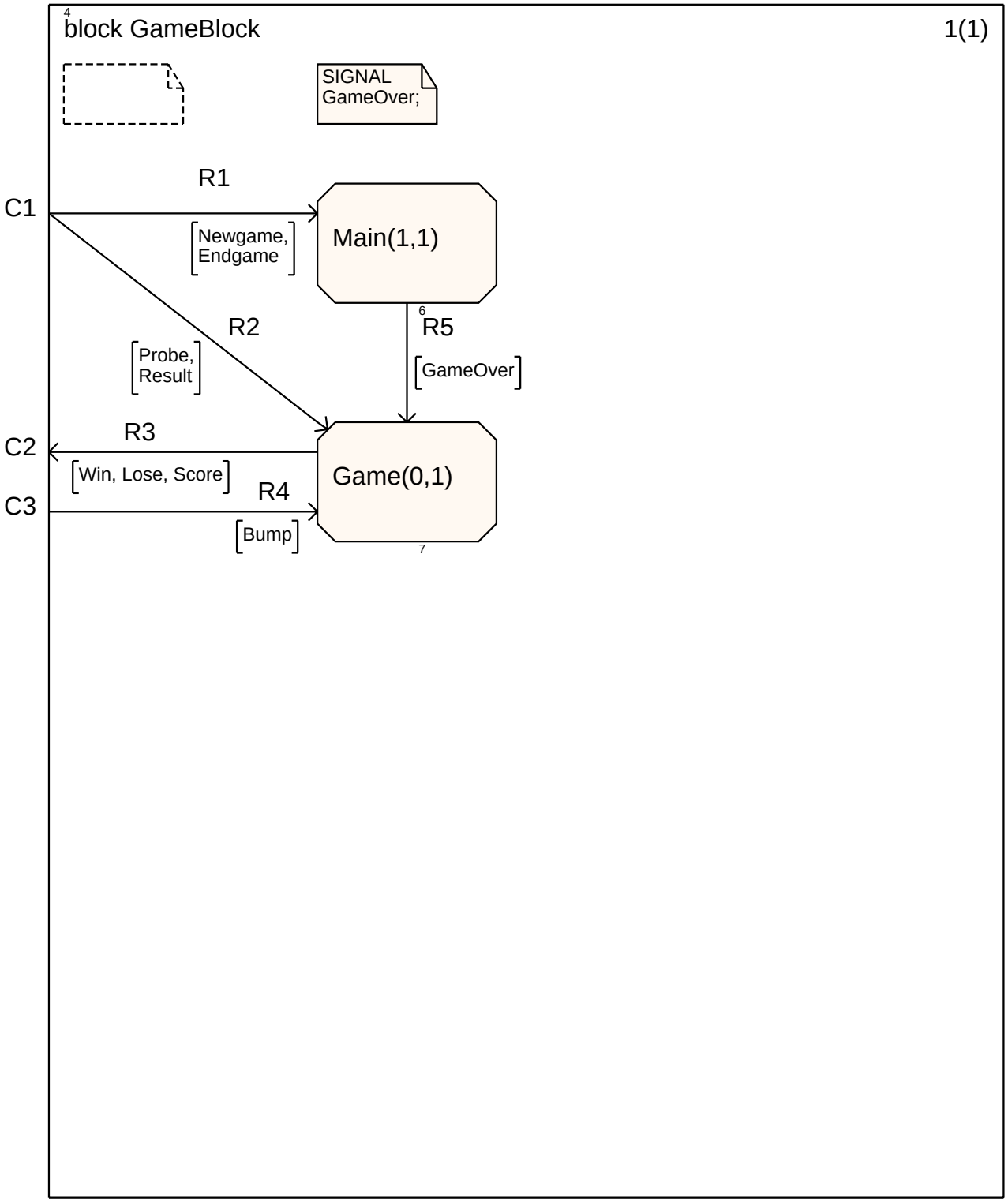
4
block GameBlock
1(1)
SIGNAL
GameOver;
R1
C1
Newgame,
Endgame
Main(1,1)
6
R5
R2
Probe,
Result
GameOver
R3
C2
Win, Lose, Score
Game(0,1)
R4
C3
Bump
7

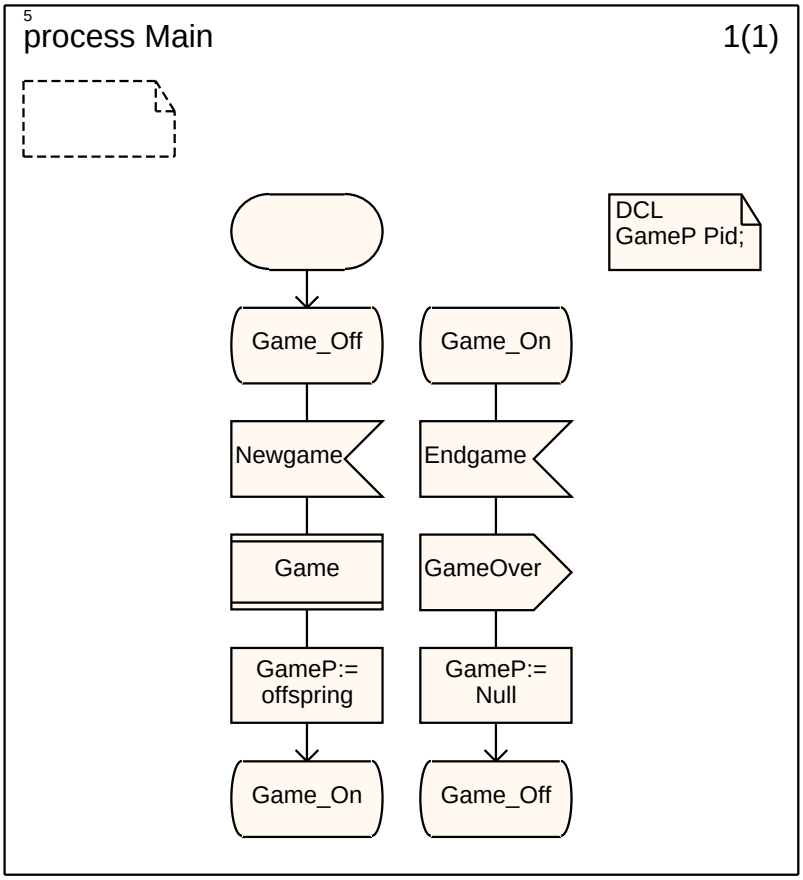
5
process Main
1(1)
DCL
GameP Pid;
Game_Off
Newgame
Game
GameP:=
offspring
Game_On
Game_On
Endgame
GameOver
GameP:=
Null
Game_Off

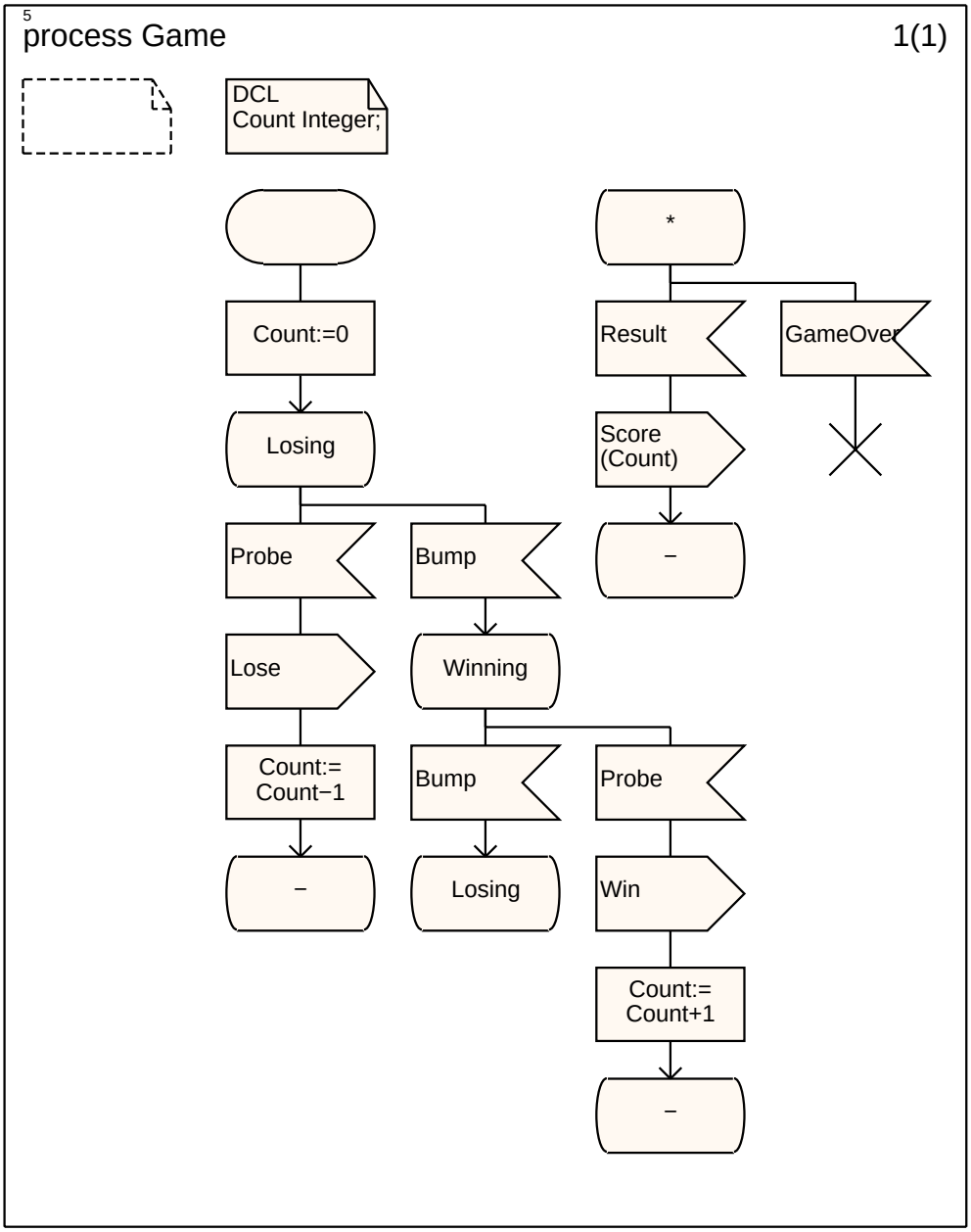
5
process Game
1(1)
DCL
Count Integer;
Count:=0
Losing
Probe
Bump
Lose
Winning
Count:=
Count−1
Bump
Probe
−
Losing
Win
Count:=
Count+1
−
*
Result
GameOver
Score
(Count)
−

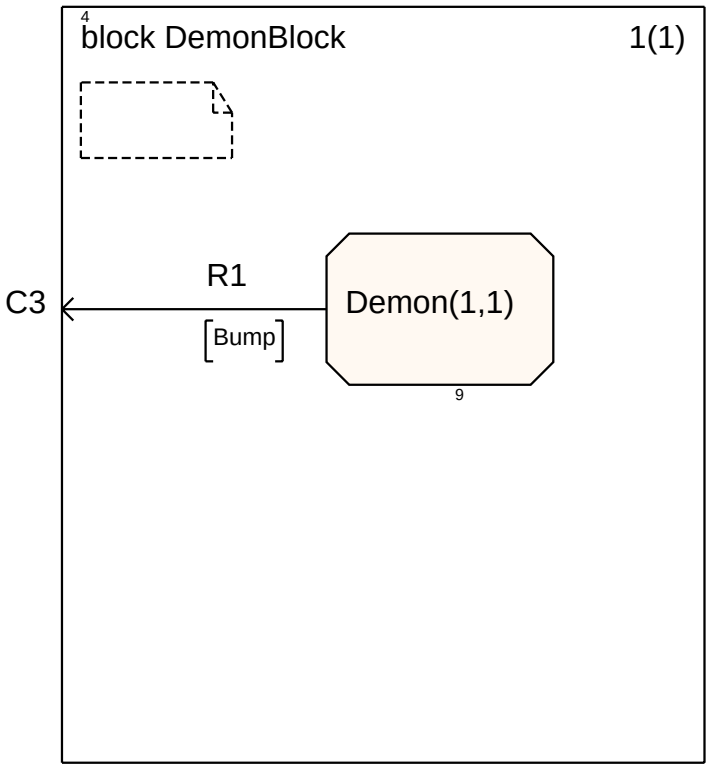
4
block DemonBlock
1(1)
R1
C3
Demon(1,1)
Bump
9

8

# process Demon



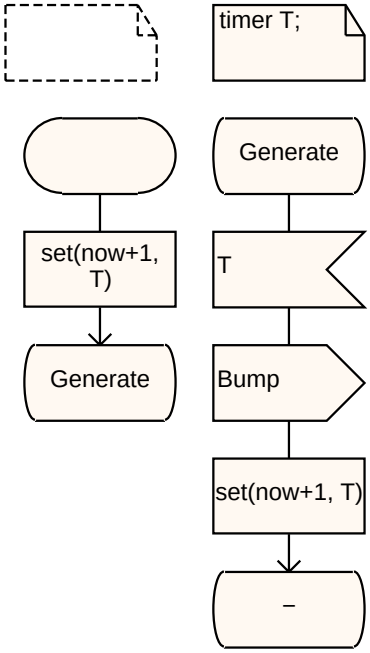

Chapter Other Documents

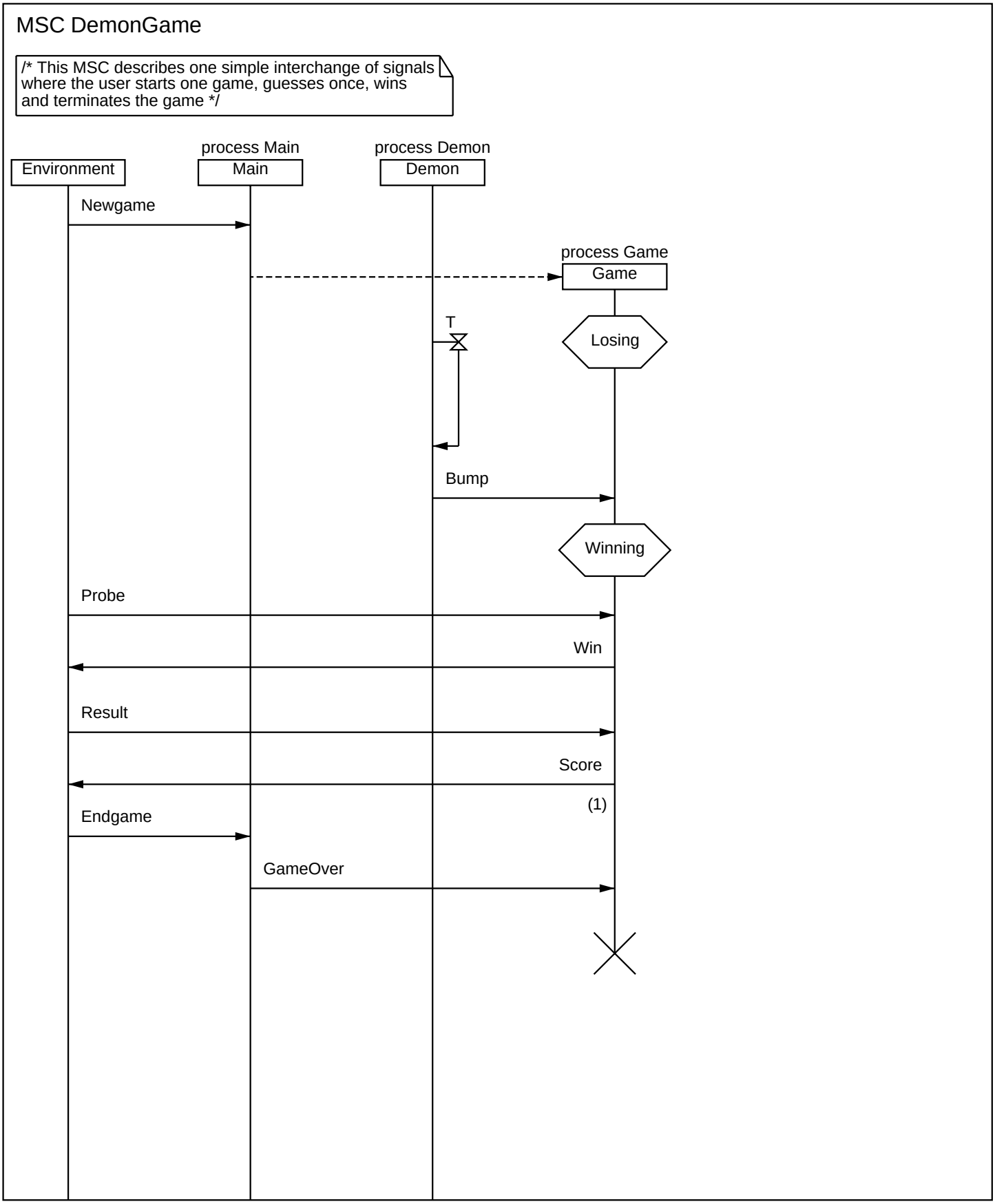
MSC DemonGame
/* This MSC describes one simple interchange of signals where the user starts one game, guesses once, wins and terminates the game */
Environment
process Main
Main
process Demon
Demon
Newgame
process Game
Game
T
Losing
Bump
Winning
Probe
Win
Result
Score
(1)
Endgame
GameOver